US007518426B1

(12) **United States Patent**
Smith

(10) **Patent No.: US 7,518,426 B1**
(45) **Date of Patent: Apr. 14, 2009**

(54) **LOW POWER FLIP-FLOP CIRCUIT AND OPERATION**

(75) Inventor: **Geoffrey J. Smith**, Mt. Gravatt (AU)

(73) Assignee: **G2 Microsystems Pty. Ltd.**, Haymarket (AU)

(*) Notice: Subject to any disclaimer, the term of this patent is extended or adjusted under 35 U.S.C. 154(b) by 4 days.

(21) Appl. No.: **11/725,047**

(22) Filed: **Mar. 16, 2007**

Related U.S. Application Data

(60) Provisional application No. 60/783,684, filed on Mar. 17, 2006.

(51) **Int. Cl.**
H03K 3/356 (2006.01)

(52) **U.S. Cl.** **327/199**; 327/203

(58) **Field of Classification Search** 327/199–207
See application file for complete search history.

(56) **References Cited**

U.S. PATENT DOCUMENTS

5,617,428 A * 4/1997 Andoh 714/726
7,064,594 B2 * 6/2006 Kim 327/199
7,183,825 B2 * 2/2007 Padhye et al. 327/202

* cited by examiner

Primary Examiner—Dinh T. Le
(74) *Attorney, Agent, or Firm*—Blakely Sokoloff Taylor & Zafman LLP

(57) **ABSTRACT**

A low power flip-flop circuit and its operation are described. In one example, the circuit includes a clocked gate for producing an output in response to an input when a clock is received, and a clock control circuit to receive the clock and the input, to determine whether the output will be changed by the input and to provide the clock to the clocked gate if the output will be changed by the input.
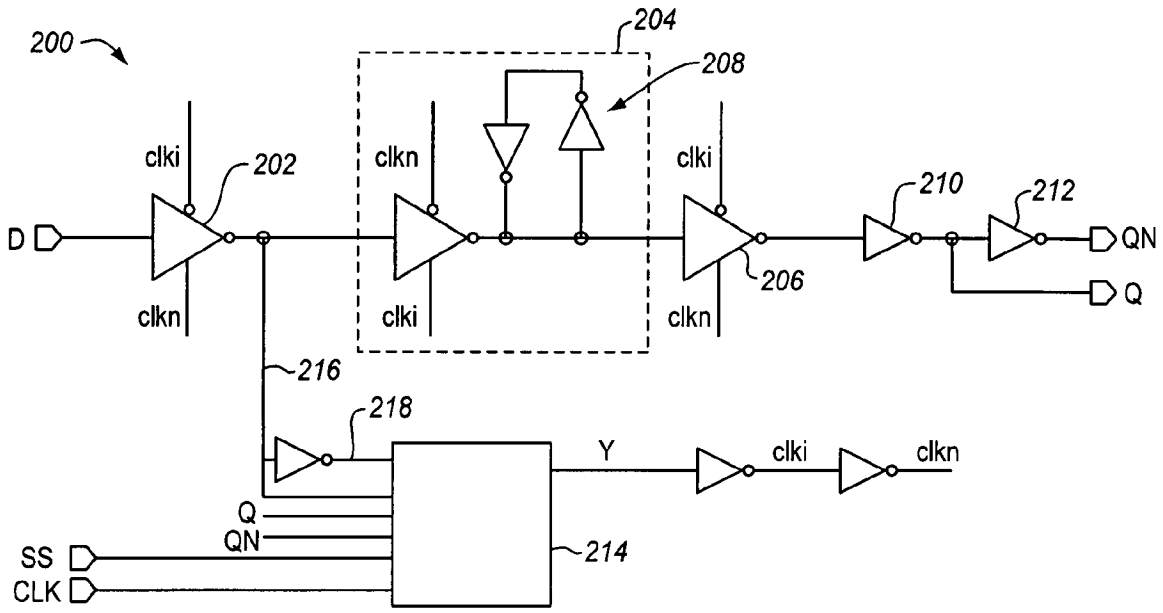
19 Claims, 4 Drawing Sheets